ARP 690-P User Reference Manual

Specifications

Model No	ARP690-P
Motherboard	Support ATX Motherboard (up to 12”x 12” Motherboard)
Slots	Offer 7 expansion slots
Display	21.5" LCD display, 1920x 1080 resolution Anti-reflection tempered strengthen glass
Drive bay	10x 3.5" (Option: 6x 5.25" drive bays)
VGA	AD conversion board, DVI interface (Option VGA)
KB/MS	Industrial multi-languages Keyboard/ touchpad Operating Life of Keys: 8 million cycles Keyboard Layout: CH, FR, GR, KR, RU, SP, UK, US
Power Supply	PS2, 750W, 100~240VAC, Auto switch
Construction	Rugged Aluminum Construction with shock absorbing rubber corners
Speaker	Built-in amplified 2x 3W speakers
Dimension	524Wx 372Hx 226D mm
Weight	14 kgs
Carrying Case	Padded carrying case with wheels

Environmental Factors

	Operating	Non-Operating
Temperature	0°C~50°C	-20°C~60°C
Relative Humidity	10%~90%	10%~95%
Approval	CE, FCC, RoHS	

Options

VGA Interface		
	●	**DVI Interface cable for DVI Graphic card**
		D-sub 15pin VGA interface cable
Touch Screen		
	●	**None**
		Touch Screen

Standard Accessory Kits

ARP 690-P			
Model	**Accessory Kit SKD**		**Qty**
ARP690-P	**1**	ARP690-P Portable Computer Chassis	1
	2	Carrying Case with wheels	1
	3	User's Manual	1
	4	Power Cord	1
	5	Anti-Static Bag	1
	6	Screw Pack (stabilizer)	1
	7	Stabilizer Supports Pack	1
	8		
	9		

Carrying Case with Wheels

1.0 Introduction

ARP 690-P features:

- Aluminum Construction with shock absorbing rubber corners
- 21.5" LCD display support Full HD, 1920x 1080 resolution
  Anti-reflection tempered glass
- Support ATX Motherboard, EATX MB (10x 3.5” model)
- Offer 7-slot expansion capability
- Industrial multi-languages keyboard with touchpad
- PS2, 750W power supply, 100~240VAC
- Offer 10x 3.5", 1x slim drive bay
  Option: 6x 5.25", 1x slim
- Anti-reflection tempered glass protects LCD
- Carrying case to manage portable PC with ease

The ARP690-P supports standard ATX form factor motherboard as well as Extended ATX motherboard (10x 3.5” drive bay version only). The chassis can always meet the need of your add-on cards configuration as well as processors choice. Whether it is ISA, PCI, PCI-X, PCI-E or combination of all of the above, the chassis can be fitted for 7 full-length expansion slots. The chassis comes with integrated 21.5”, 16:9 widescreen LED backlight LCD panel with 1920x 1080 full HD resolution. The display can accommodate the latest graphic card to provide fast refreshing video playback, editing and vast desktop space with wide angle viewing capability.
The chassis have 5x 5.25" drive bays; this allows the chassis to mount large amount of instrumentation connections or convert to large amount of removable storage (with aftermarket kit to provide up to 8x 3.5" Enterprise SATA/SAS drives or up to 30x 2.5" SATA drives). Another option is the 10x 3.5" drive bay configuration which can also host large amount of storage (up to 20x 2.5" SATA drives) and at the same time provide room for Extended ATX form factor dual processors system board. There is also an integrated slim optical drive bay, 2x 120mm cooling fan and a combination keyboard touchpad that folds into the chassis and doubles as an additional protection for the display.

Applications: Military, Industrial automation, Digital TV test & analysis, Mobile Computing, Outdoor Computers, video conferencing, E-learning, Speech Technologies, Portable Workstation, Telemedicine, Multimedia, Mission Critical Computing

ARP690 with 10x 3.5”, 1 slim drive bay

ARP690 with 6x 5.25”, 1 slim drive bay

2.0 Operation

1. Releasing Keyboard from main unit by pushing the 2 taps located on upside of the chassis to release the locking mechanism, and then pull out the keyboard.

2. You have the option of leaving the keyboard attached to the chassis or they can be release independently from the chassis by pushing the two levers inward to release the lock.

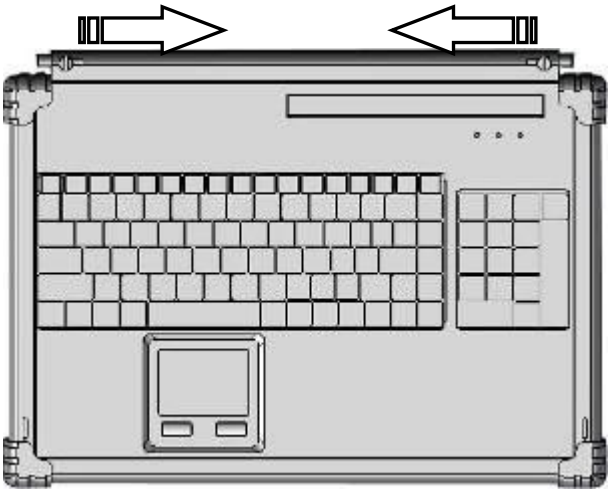

3. Connect the RJ-45 keyboard/touchpad cable to the front bottom right corner of the chassis. Make sure the pin direction is correct when inserting.

4. You can flip the 2 feet located underneath the chassis outward to help create an angle for the chassis for viewing comfort.

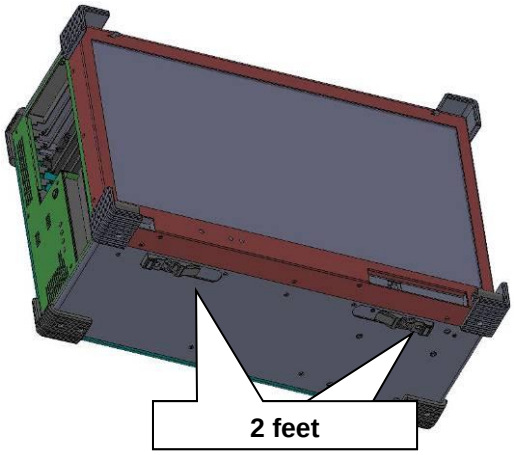

5. Connect the power cable outlet into the power supply unit

6. Press the power switch located on the right side of the chassis to power up the unit.
The indicator LED lights for Power and HDD activity and reset switch is located on front panel.

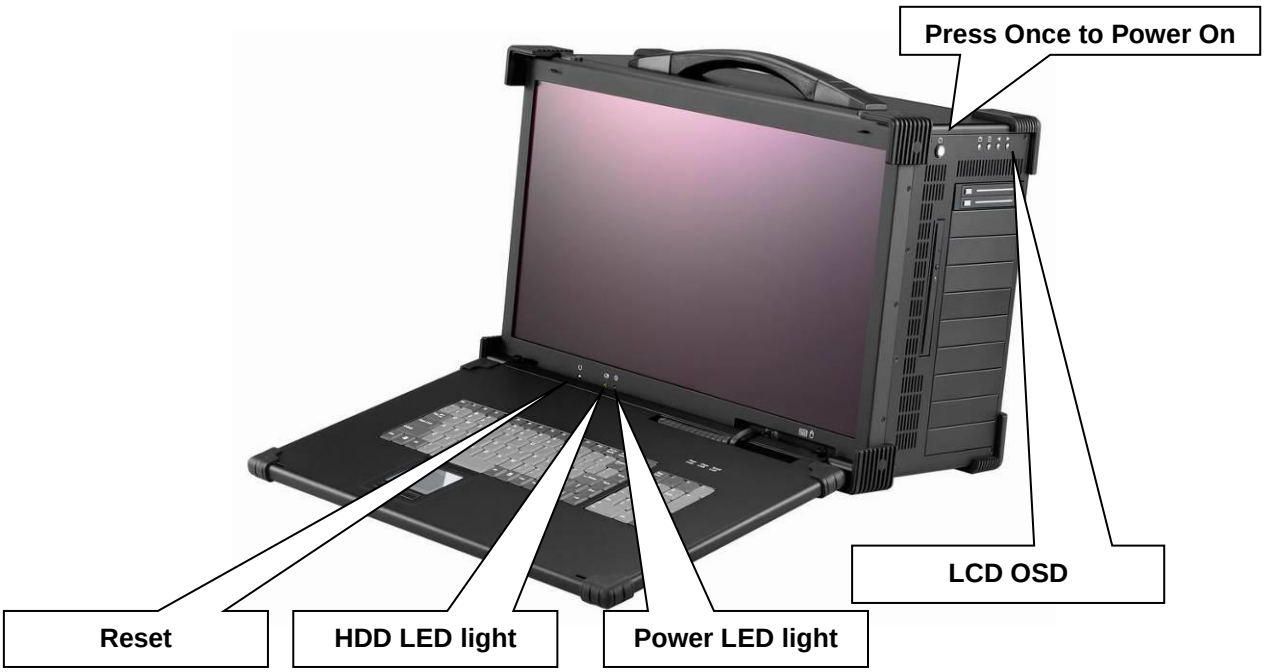

7. Access the available expansion slots on the left side of the chassis.

8. ARP690 provides 10x 3.5”, 1x slim drive bays
   or 6x 5.25”, 1x slim drive bays

9. Full function keyboard and touchpad surface act as input for the system.

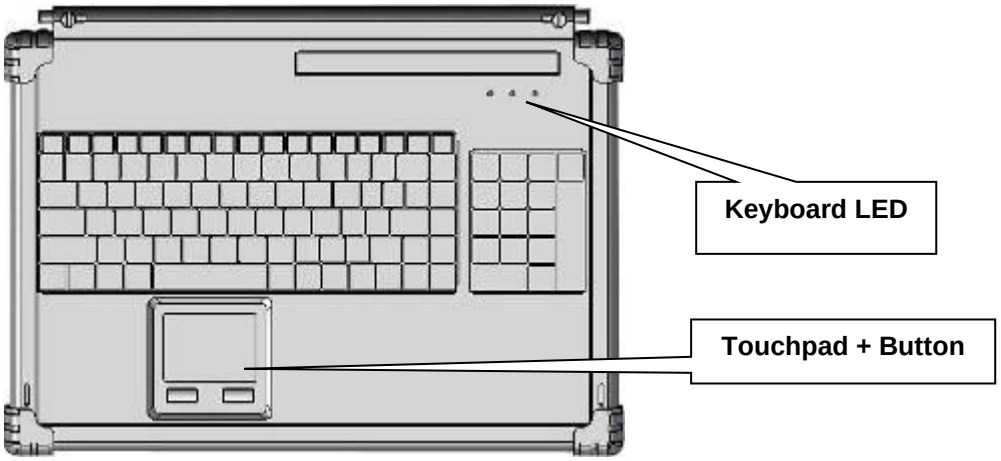

3.0 Internal Hardware Access

Be sure power cable is not connected to the system before proceeding

1. Open Back Cover

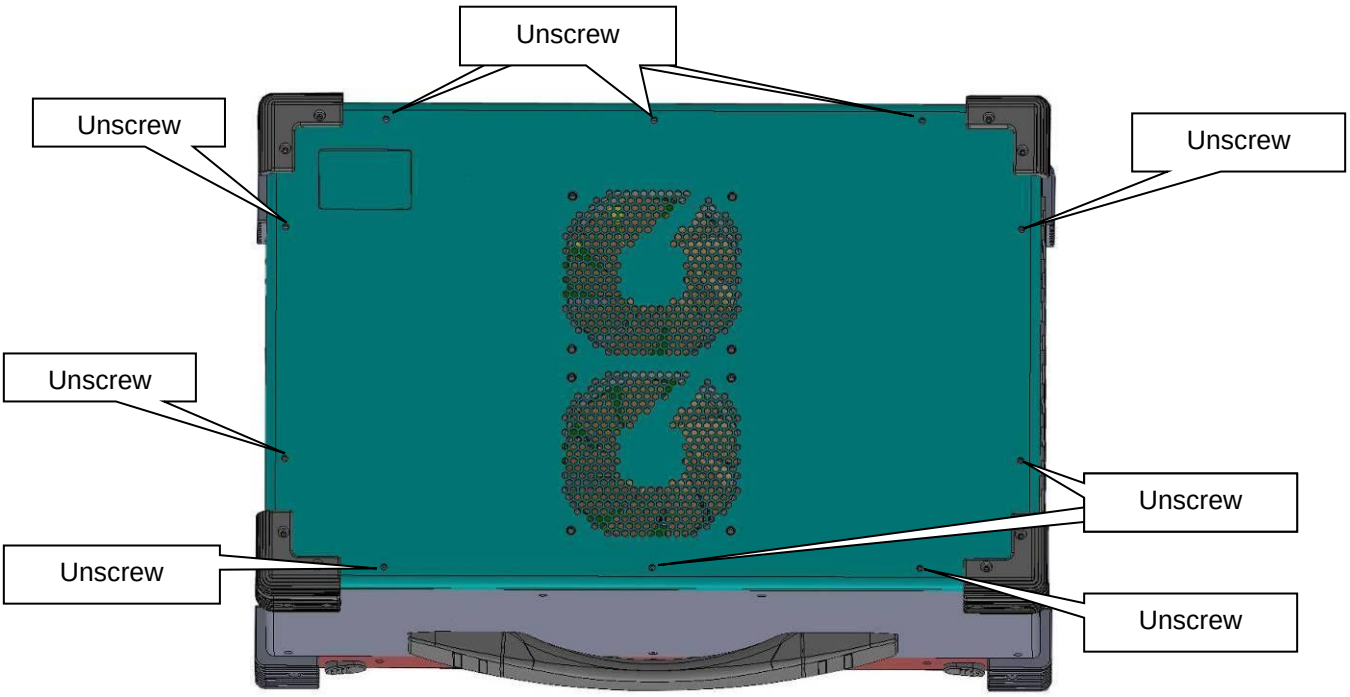

2. Remove the Card stabilizer bar

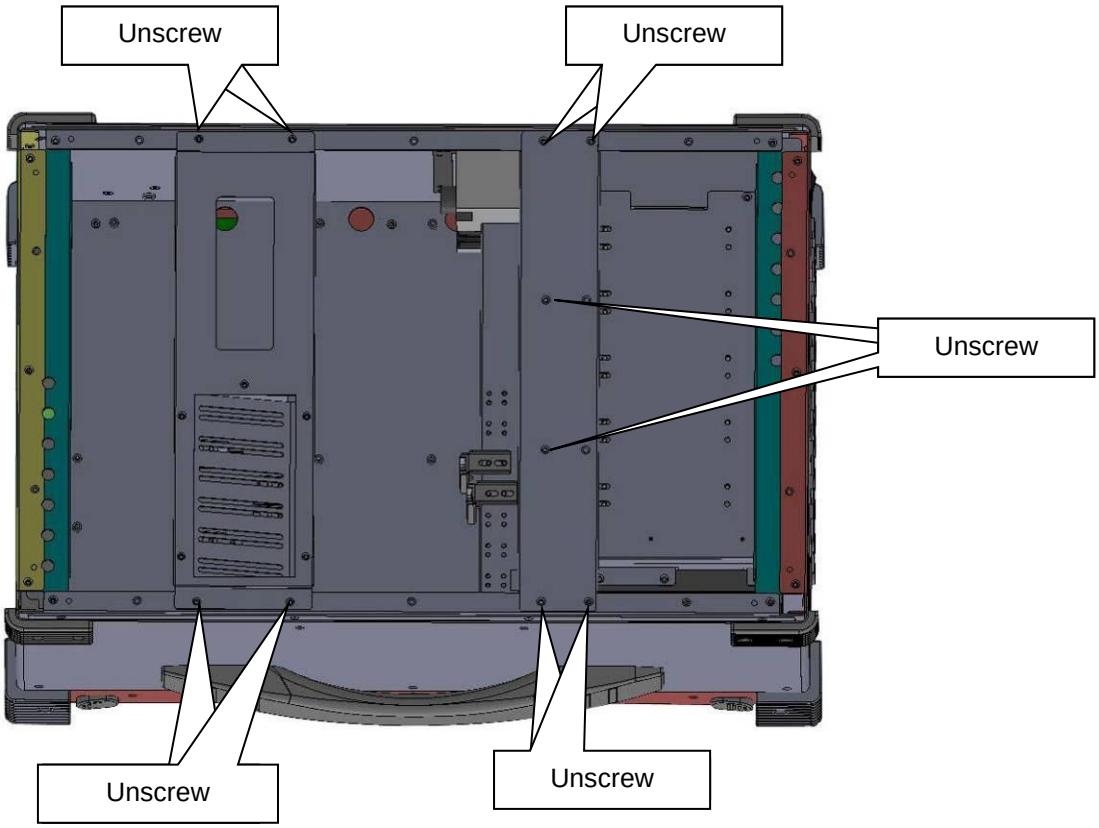

3. Remove the drive bay (10x 3.5”)

3.1 Remove the right side cover

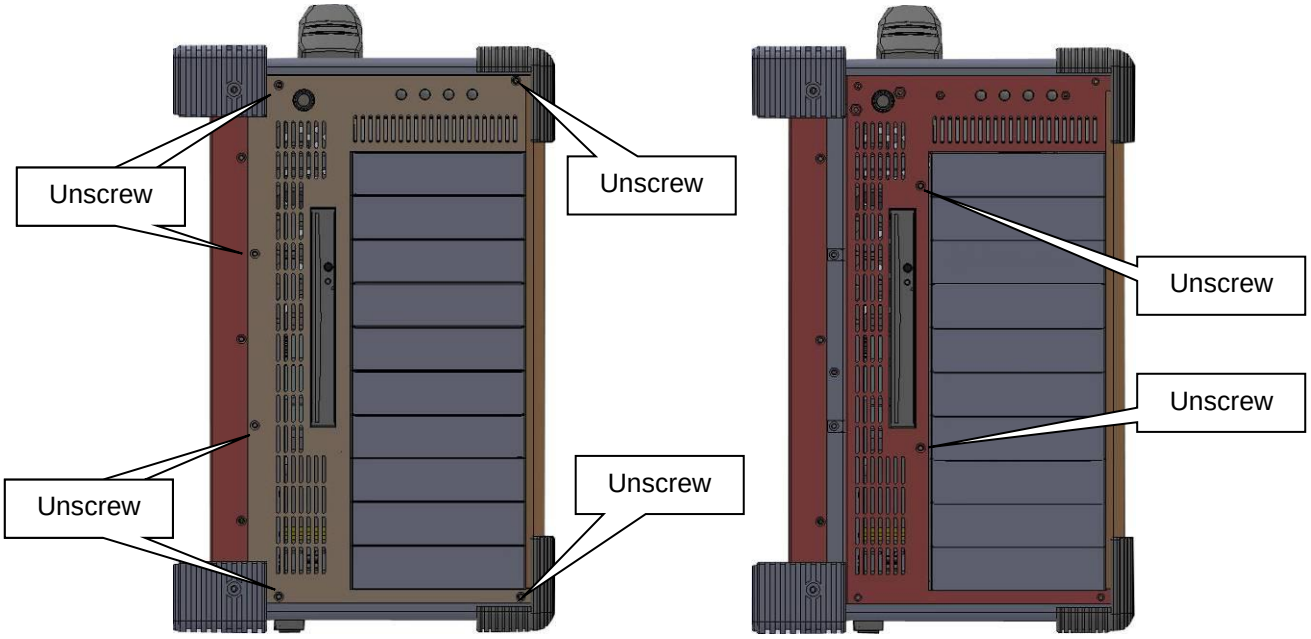

3.2 Remove the drive bay: Slide and remove the 3.5” drive bay

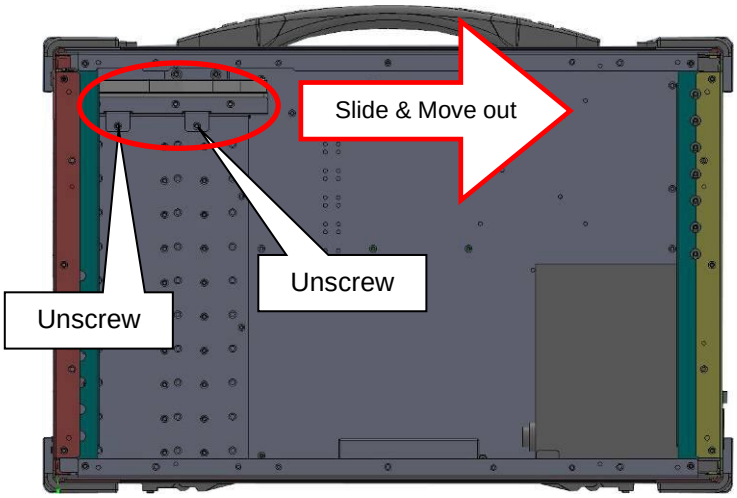

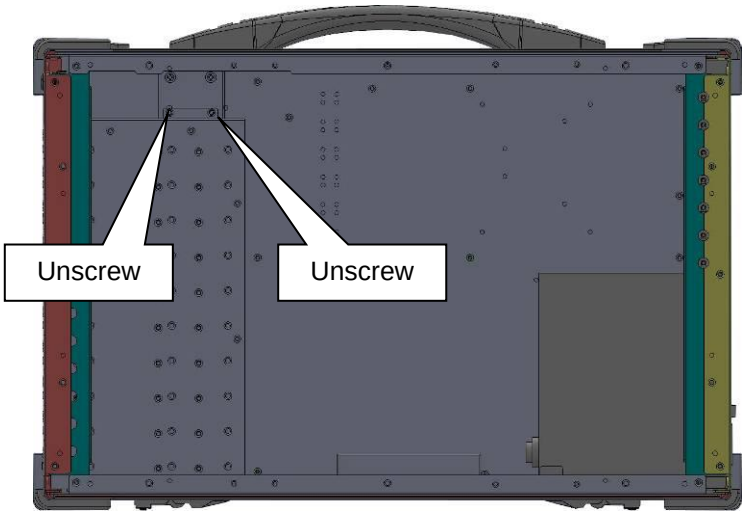

3.3 Remove the drive bay: Release the bottom of 4x Screws

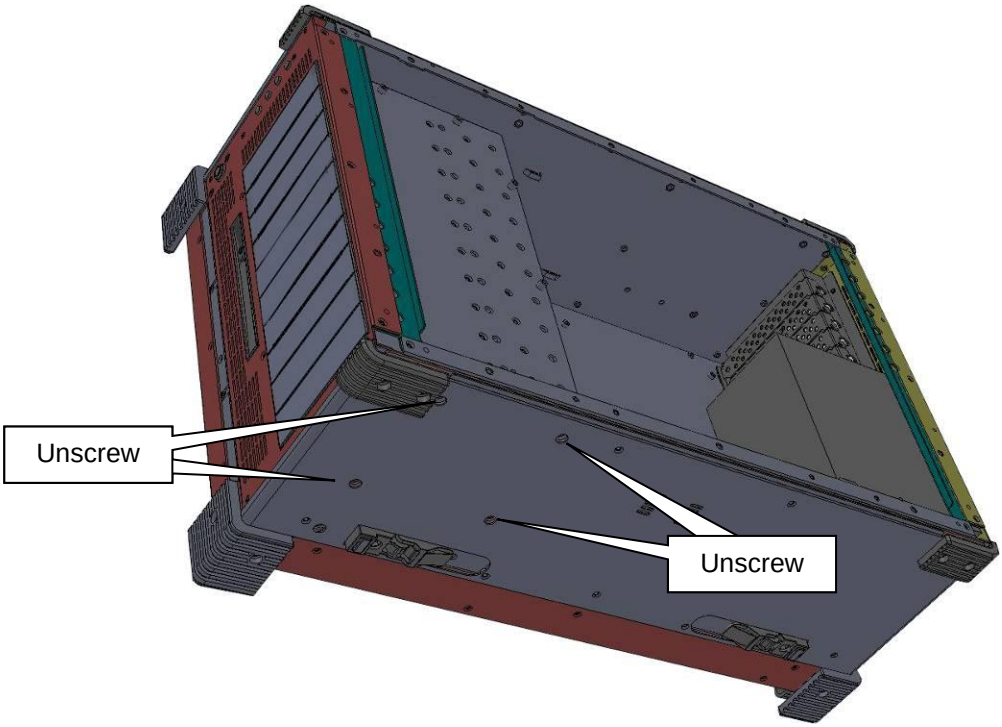

3.4 Slide and move out the drive bay slowly

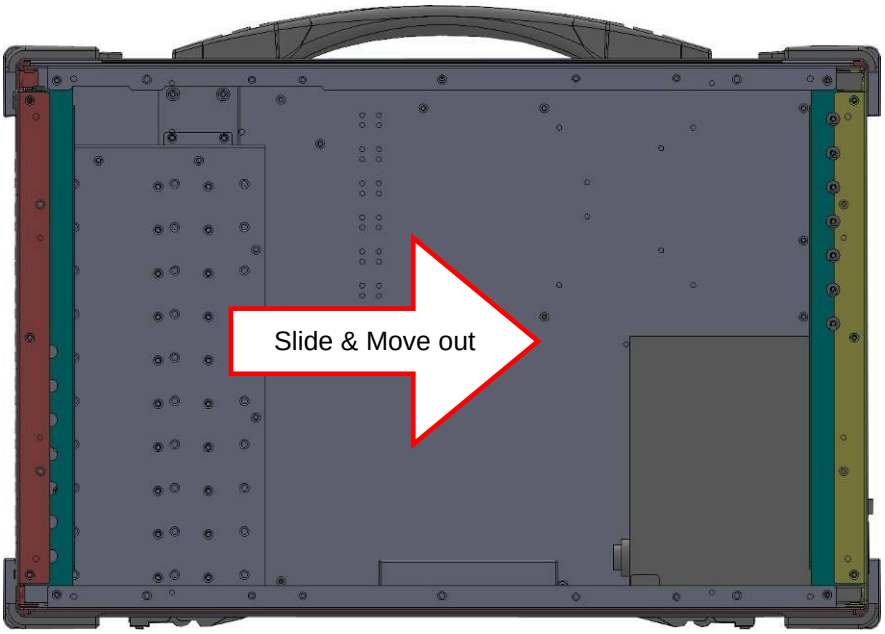

4. Remove the drive bay (6x 5.25”)

4.1 Remove the right side cover

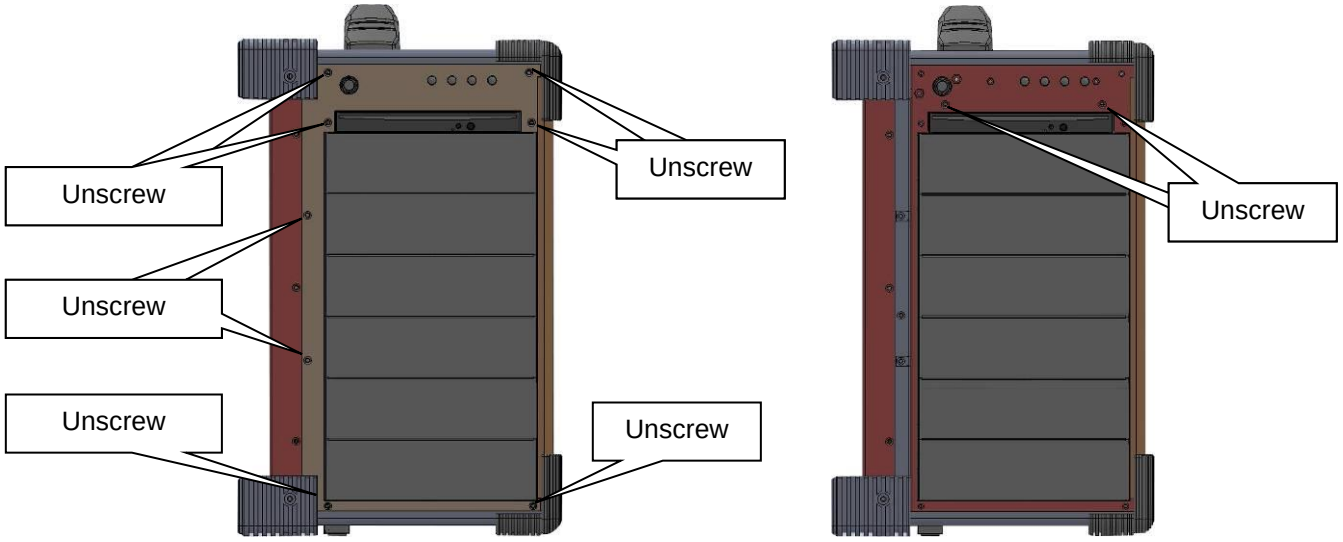

4.2 Remove the drive bay: Slide and remove the 3.5” drive bay

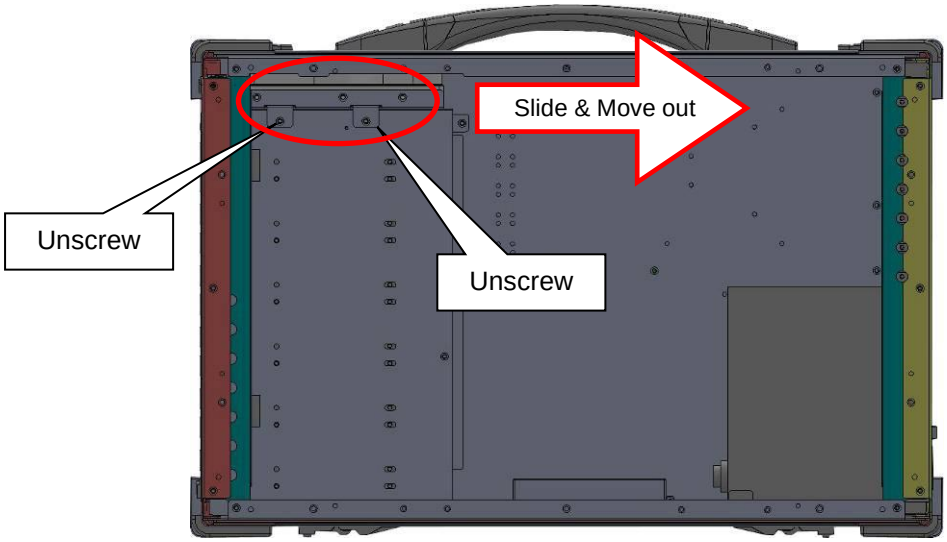

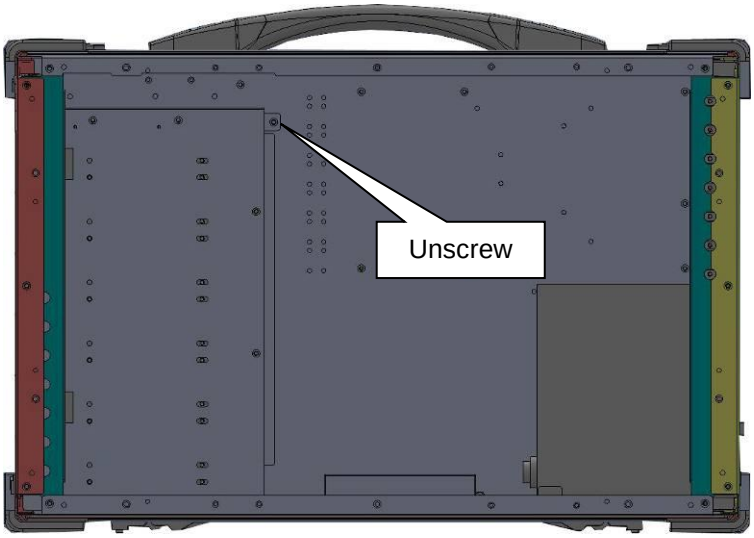

4.3 Remove the drive bay: Release the bottom of 4x Screws

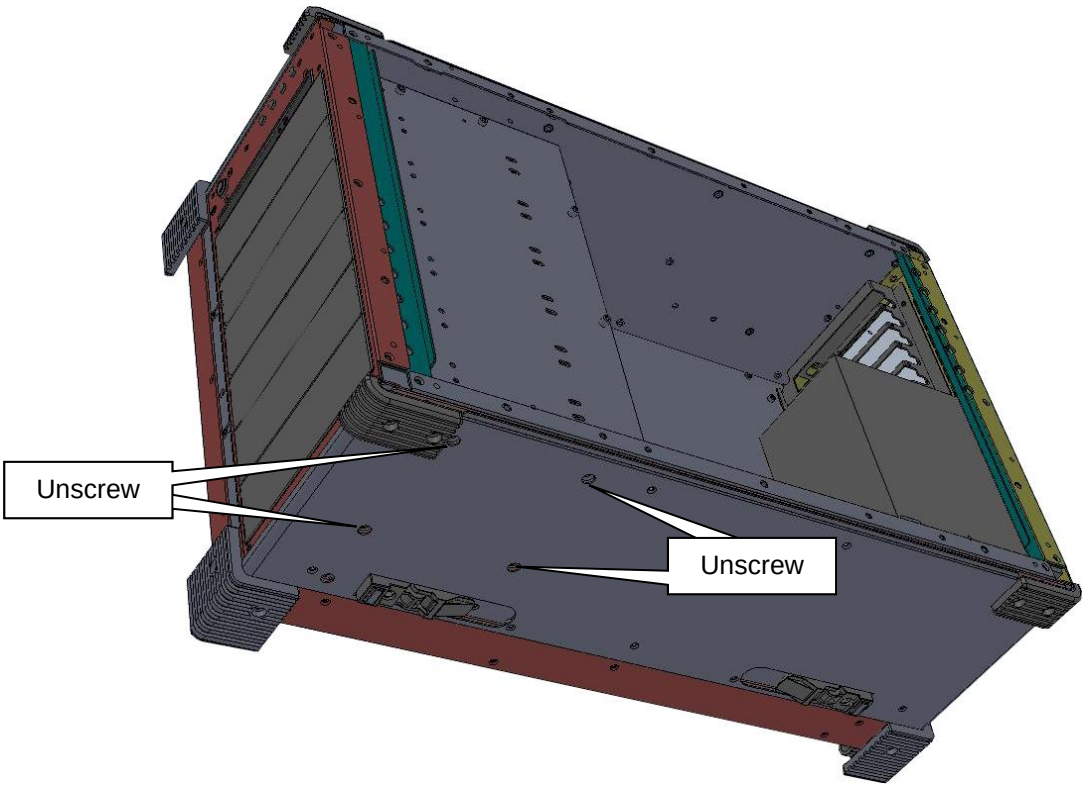

4.4 Slide and move out the drive bay slowly

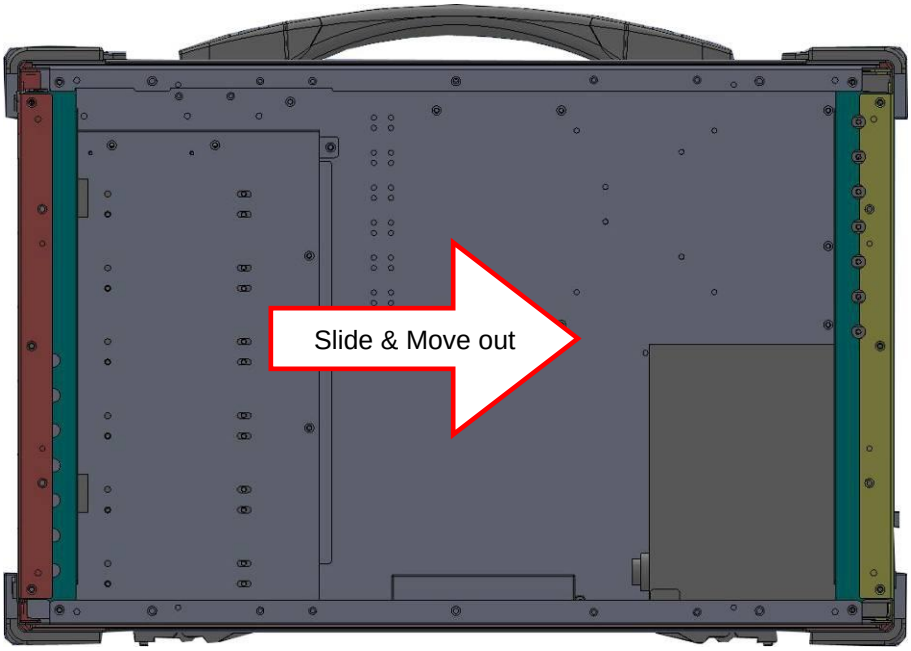

5. Remove The Power Supply

5.1 Remove the left side cover

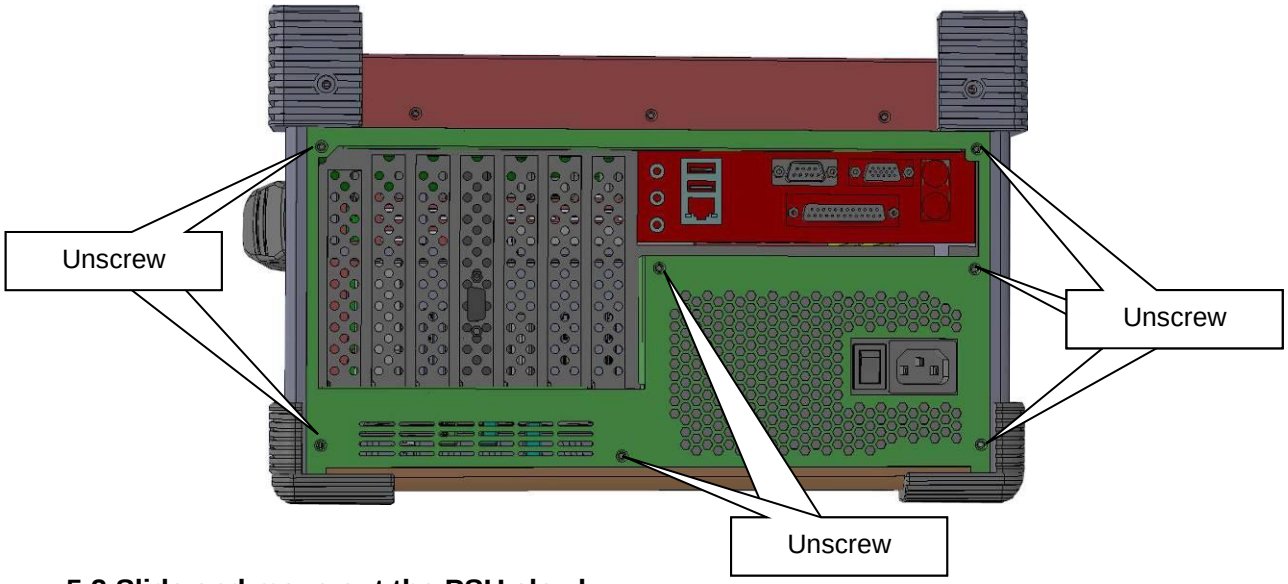

5.2 Slide and move out the PSU slowly

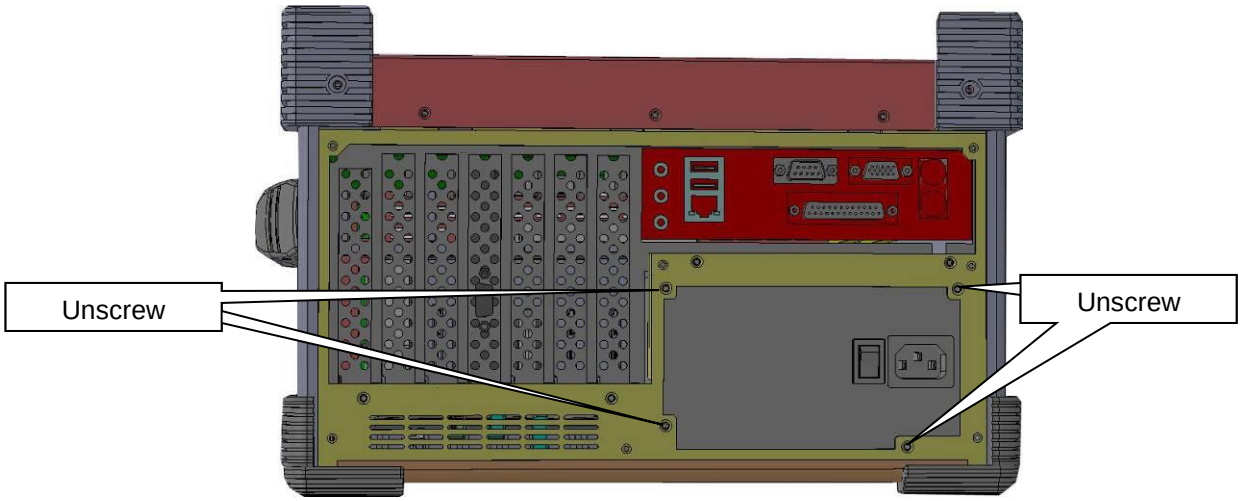

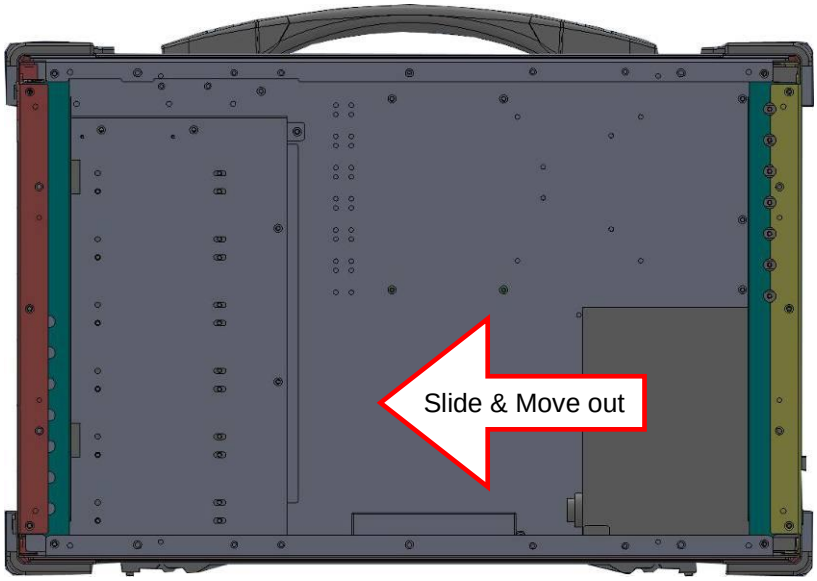

6. **Install the proper stand-off matching the Motherboard into the chassis and correct I/O plate supplied by board manufacturer and secure it the motherboard onto chassis.**

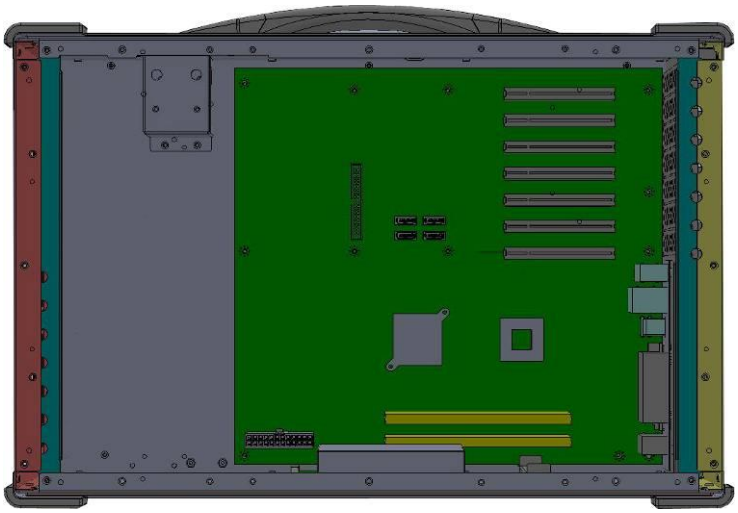

7. **Install the drive bay into chassis**

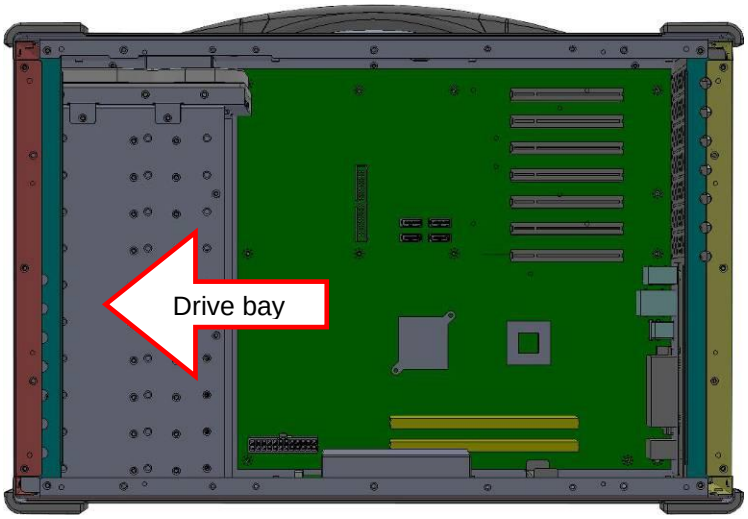

8. **Install the Power Supply into chassis**

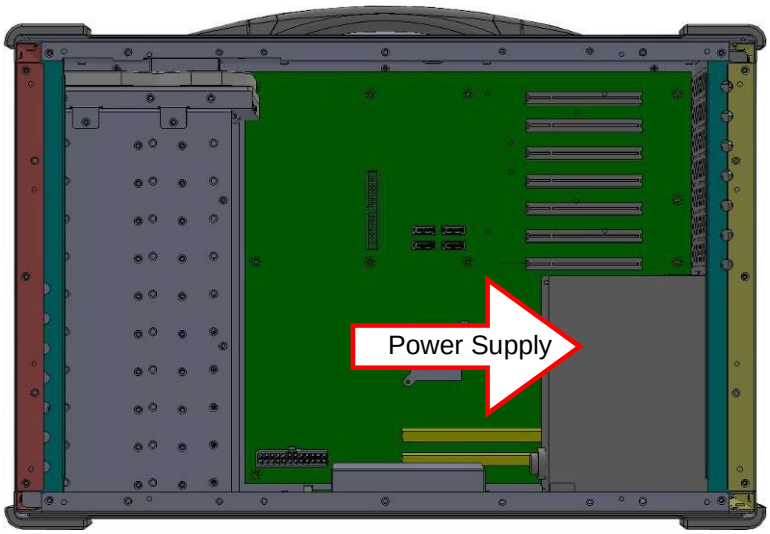

9. Install your add-in card into the appropriate slot
Remount the card stabilizer bar

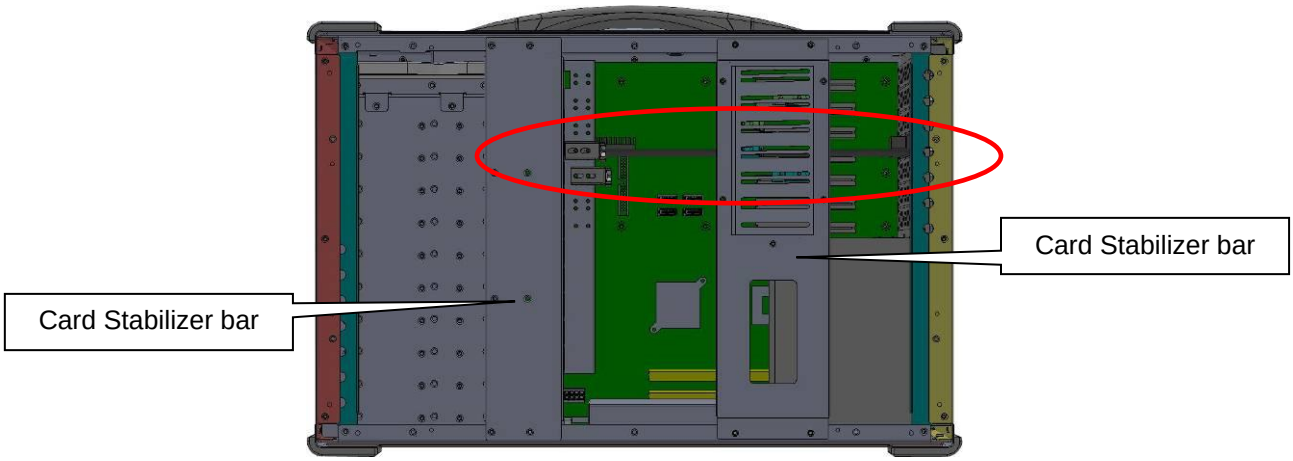

10. Put the rear cover back

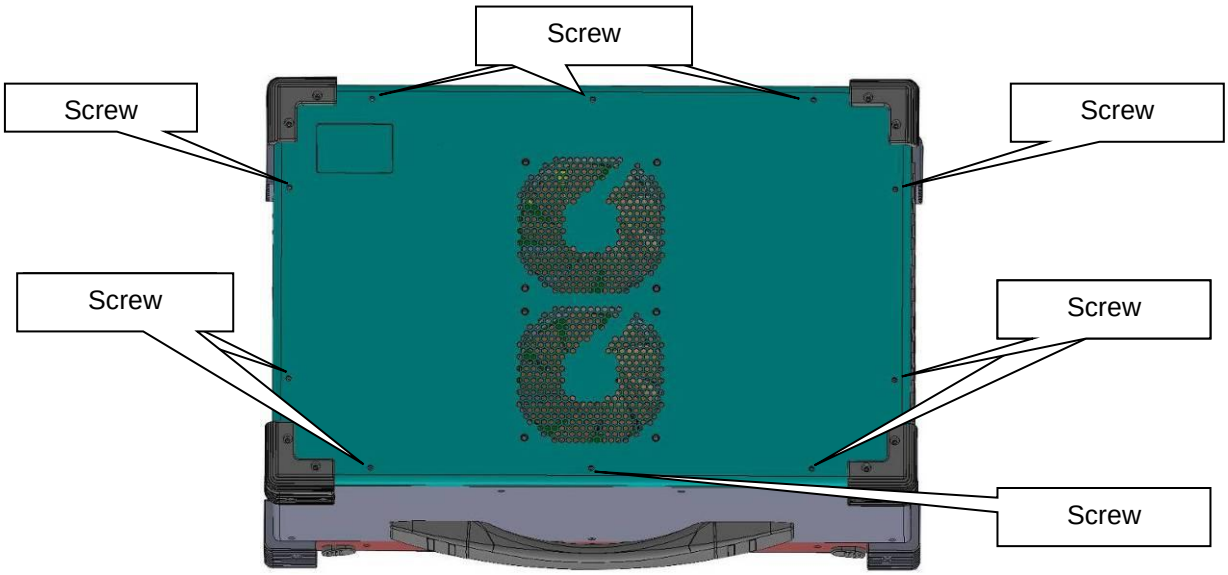

4.0 Software Installation

You can use the built-in DVD-RW to load operating system and additional applications software into the system. Available medium from USB or download can also be possible.

DOS Boot up: DOS boot up requires you to have a version of the DOS installed on hard disk drive or floppy. Depending on the execution sequence you have set in the batch file, you will usually get a DOS prompt after loading.

Window Boot up: Windows boot up requires you to have Windows installed in the hard disk drive. During Windows boot up, you will see a sequence of access to your hard disk drive which will eventually take you into a graphical user interface environment.

Other O/S description: Many other operating systems are available in the market, such as Linux, Windows, Solaris and DOS. These operating systems will behave differently and you should react accordingly.

5.0 Troubleshooting

1. Installation problem:

1. Normally problem with a fail start up is due to installation problem.
2. Double check all the peripheral cards or items you have added to the ARP.
3. Are all the items seated properly?
4. Are all the cables connected back to its original or correct position?
5. Are the items you have added compatible?
6. Before you check for these, turn the computer off and unplug the power cord.
7. Check for 1 thru 5 and then re-power up the computer.
8. Remove all items that were added and re-try system power up.
9. If the system starts now, try inserting 1 new item in at a time and try powering up.
10. Repeat this step until you get the desired result.

2. BIOS Beep Code:

The BIOS beep code indicates error in system initialization. The BIOS of the system board will associate with video and memory error. Please check your video card is properly seated and your memory is installed properly.

3. System Fails to power up:

1. Check you power connection first.
2. Check the main power switch is in the ON positions (I) *If cold switch is available.
3. Press the power button located on the machine.

4. No display (LCD):

1. Check all the proper power up procedure has been taken.
2. Hook up an external LCD to the VGA port, to check if video is present.
3. If video is present on external LCD, check the internal LCD cable connection.
4. Or check your VGA setting to make sure LCD video is enabled.
5. If there is no video on external, check your system to make sure everything is seated properly.
6. If everything is seated properly and still no video, call us for further assistance.

5. External LCD no display:

1. Check to see if you have internal LCD video.
2. Check if your LCD is functioning properly.
3. Check your VGA setting to make sure external video is enabled.

6. Keyboard fails:

1. Make sure the keyboard plug is inserted completely into the portable.
2. Make sure you do not have another keyboard connected to the side I/O PS/2 port.

7. TOUCHPAD fails:

1. Make sure the keyboard plug is inserted completely into the portable.
2. If you have an external PS/2 mouse hook up on the side I/O PS/2 port, the touch pad will not function simultaneously.
3. If your operating system requires and does not load the mouse driver automatically, make sure you have the proper mouse driver loaded.