ARL980-B

Multi-Slot Portable Computer

Specification

Model No	ARL980-B
Construction	Rugged Aluminum Construction
CPU	Intel Core i5-4400E, 2.7GHz Processors Option: Intel Core i7-4700EQ, 2.4GHz
Chipset	Intel QM87 PCH Mobile Platform Controller Hub
Slot	1x PCI-E (x16), 1x PCI-E (x1) full-length slots Option: 2 PCI full-length slots
Display	17.3" LCD with LED backlight, 1920x 1080 resolution Anti-reflection tempered strengthen glass
Memory	2x 8GB RAM
HDD	SSD 240GB, 1x 2.5" removable SATA
CDROM	1x Slim DVD-RW
Interfaces	2x DB9 for COM1, COM2, DVI-D + DVI-I, DP 2x Gbit LAN RJ-45, RCA Jack 3x1 for HD audio 4x USB 3.0, 2x USB 2.0 connector
Audio	Intel® QM87 built-in high definition audio controller With Realtek ALC892 for 7.1 CH audio
LAN	Intel Clarkville I1217LM GbE PHY Intel Pearsonville I211AT as 2nd GbE
Speaker	Built-in amplified 2x 3W speakers
KB/MS	Multi-language industrial keyboard with touchpad
Power Supply	2x 95W Li-ION battery Packs (Hot-Swappable) 100W, 90~264 VAC adapter
Dimension	428.6x 110.8x 367.5 mm (Wx Hx D)
Weight	6.8 kgs
Carrying Case	Padded carrying case with wheels

Environmental Factors

	Operating	Non-Operating
Temperature	0°C~50°C	-20°C~60°C
Relative Humidity	10%~90%	10%~95%
Approval	CE, FCC, RoHS	

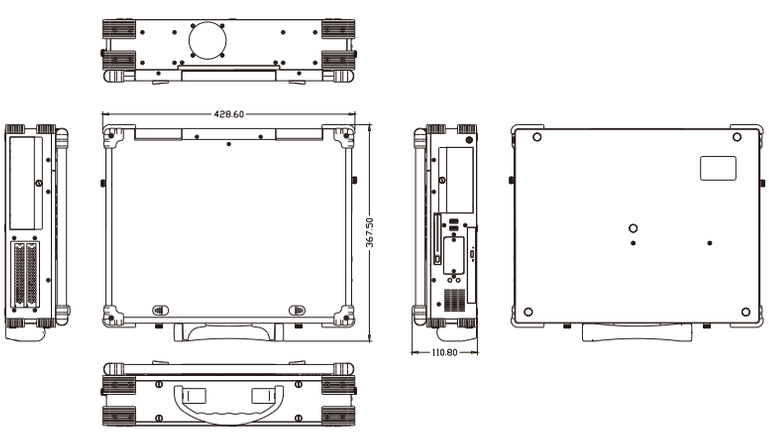

Features

- All-in-one design rugged portable computer
- Compact Size Lightweight Design
- Built-in 17.3" LCD with LED backlight , 1920x 1080
- Intel QM87 (Gen4), Intel Core i7/i5 Processors
- 2x 95W Li-ion battery packs, 100W adapter
- Intel Core i5-4400E (2.7 GHz) Processors
  Option: Intel Core i7-4700EQ (2.4 GHz) Processors
- Industrial Keyboard multi-language with touchpad
- 1x PCI-E (x16), 1x PCI-E (x1) full-length slots
  Option: 2 PCI full-length slots
- Built-in SSD 240GB, 1x 2.5" removable SATA
- Dual Gigabit Ethernet, 2x COM Port
- Carrying case to manage portable PC with ease

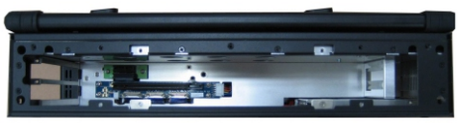

1PCI-E(x16), 1PCI-E(x1) full size expansion slots

2PCI full size expansion slots

Ordering Information

ARL980-B17WUSA

17.3" LCD, 1920x 1080, i5-4400E CPU, 2x 8G RAM, SSD 240G, 1PCI-E (x16), 1PCI-E (x1), DVD-RW, Battery Packs, Carry case

ARL980-B17WUSB

17.3" LCD, 1920x 1080, i5-4400E CPU, 2x 8G RAM, SSD 240G, 2 PCI slots, DVD-RW, Battery Packs, Carry case

Option:

Processor: Intel i7-4700EQ
Touch screen
Sunlight readable (High brightness)